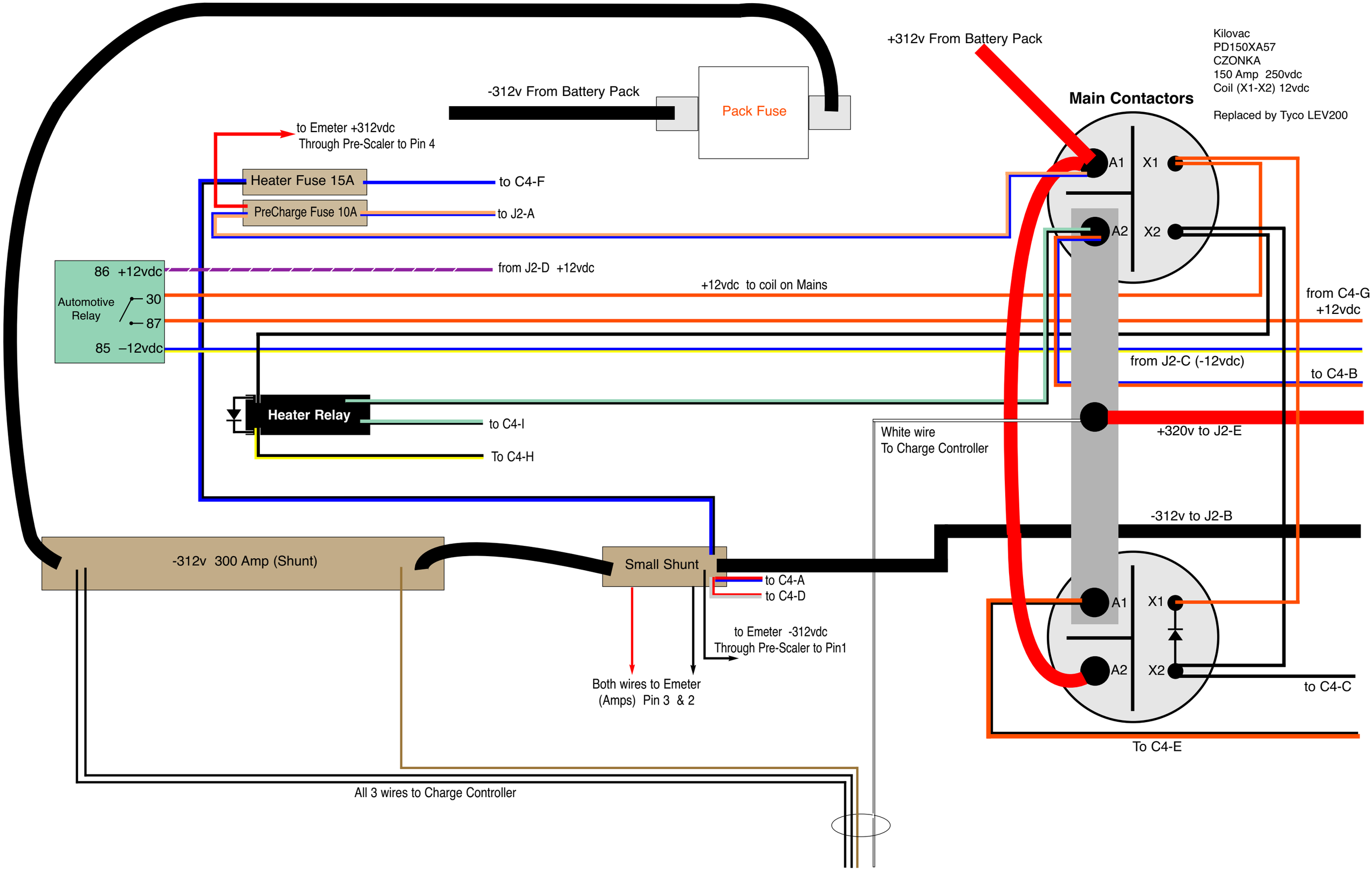
+312v From Battery Pack
Kilovac
PD150XA57
CZONKA
150 Amp 250vdc
Coil (X1-X2) 12vdc
Replaced by Tyco LEV200
Main Contactors
-312v From Battery Pack
Pack Fuse
to Emeter +312vdc
Through Pre-Scaler to Pin 4
Heater Fuse 15A
to C4-F
PreCharge Fuse 10A
to J2-A
A1
X1
A2
X2
86 +12vdc
from J2-D +12vdc
Automotive
Relay
30
87
85 –12vdc
+12vdc to coil on Mains
from C4-G
+12vdc
from J2-C (-12vdc)
to C4-B
Heater Relay
to C4-I
To C4-H
White wire
To Charge Controller
+320v to J2-E
-312v to J2-B
-312v 300 Amp (Shunt)
Small Shunt
to C4-A
to C4-D
to Emeter -312vdc
Through Pre-Scaler to Pin1
Both wires to Emeter
(Amps) Pin 3 & 2
A1
X1
A2
X2
to C4-C
To C4-E
All 3 wires to Charge Controller